1.1/1.6 GPF
DUAL FLUSH ELONGATED
All-In-One Toilet

OTHER COLORS/FINISHES:

- BISCUIT
- BLACK
- BONE

FEATURES

- High-efficiency dual flush volume of 1.6 GPF (solids) or 1.1 GPF (liquids)
- Meets HET rebate standards - high rebate dollars
- QuickConnect™ Installation System
- High performance bowl design
- Large water spot for a clean bowl
- 12″ rough-in
- 2″ fully glazed trapway
- Large 10.25″ x 20.25″ footprint, excellent for retrofitting
- Limited Lifetime Warranty

FLUSH POWER | CHAIR HEIGHT | ELONGATED BOWL

INCLUDES:	
⊙ TANK	⊙ BOLTS/CAPS
⊙ BOWL	⊙ WAX RING
⊙ SEAT	⊗ SUPPLY LINE

⊙ *Included* ⊗ *Not Included*

© 2016 Glacier Bay

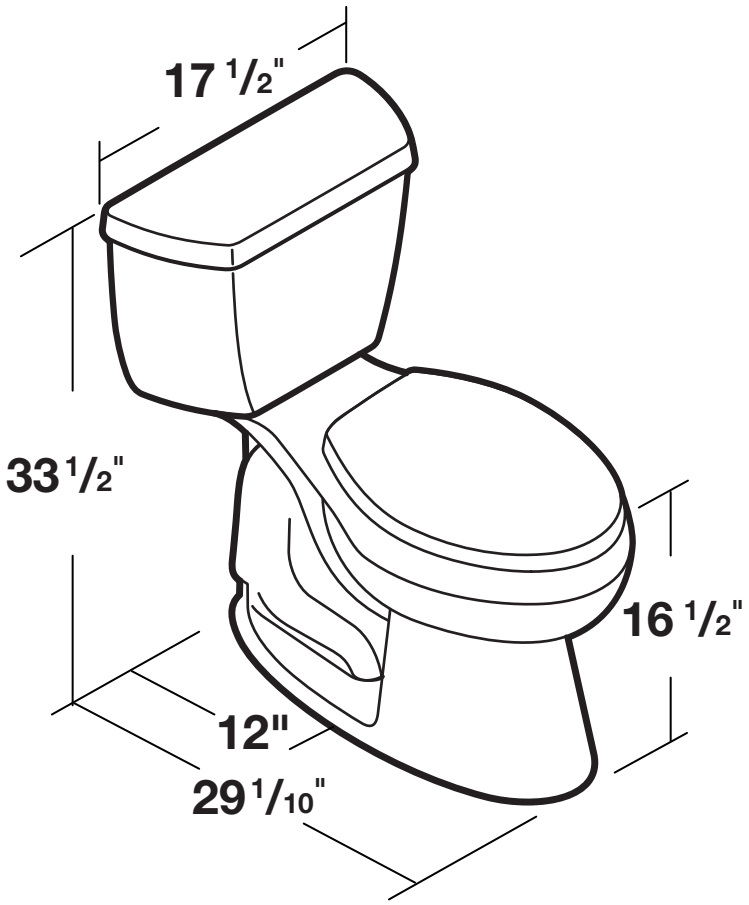

ASSEMBLED SIZE:
29 1/10" Length 17 1/2" Width 33 1/2" Height

WARRANTY INFO

Glacier Bay products are manufactured with superior quality standards and workmanship and are backed by our limited lifetime warranty. Glacier Bay products are warranted to the original consumer purchaser to be free of defects in materials or workmanship. We will replace FREE OF CHARGE any product or parts that proves defective. Simply, return the product / part to any of The Home Depot retail locations or call 1-855-HD Glacier (1-855-434-5224) to receive the replacement item. Proof of purchase (original sales receipt) from the original consumer purchaser must be made available for all Glacier Bay warranty claims.

This warranty excludes incidental/inconsequential damages and failures due to misuse, abuse or normal wear and tear. This warranty excludes all industrial, commercial and business usage, whose purchasers are hereby, extended a five year limited warranty from the date of purchase, with all other terms of this warranty applying except the duration of warranty.

Some states and provinces do not allow the exclusion or limitation of incidental or consequential damages, so the above limitations may not apply to you. This warranty gives you specific legal rights and you may also have other rights that vary from state to state and province to province. Please see a store or contact 1-855-HD Glacier for more details.
Contact the Customer Service Team at 1-855-434-5224 or visit www.HomeDepot.com

INSTALLATION NOTES

Install this product according to the installation guide. For back-to-back toilet installations: Use only a 45° double wye fitting. Will comply with the Americans with Disabilities Act (ADA) when installed per the requirements of the 2010 ADA Standards of Accessible Design, Section 604 Water Closets, of the Act. The Model Plumbing Codes require the installation of elongated open-front toilet seats in public bathrooms. Will comply with CSA B651 when installed per Clause 4.3.6 of the standard. Will comply with OBC Barrier Free requirements when installed per Clause 3.8.3.8 and 3.8.3.9.

© 2016 Glacier Bay